CGH Polska

Anchoring of Tanks

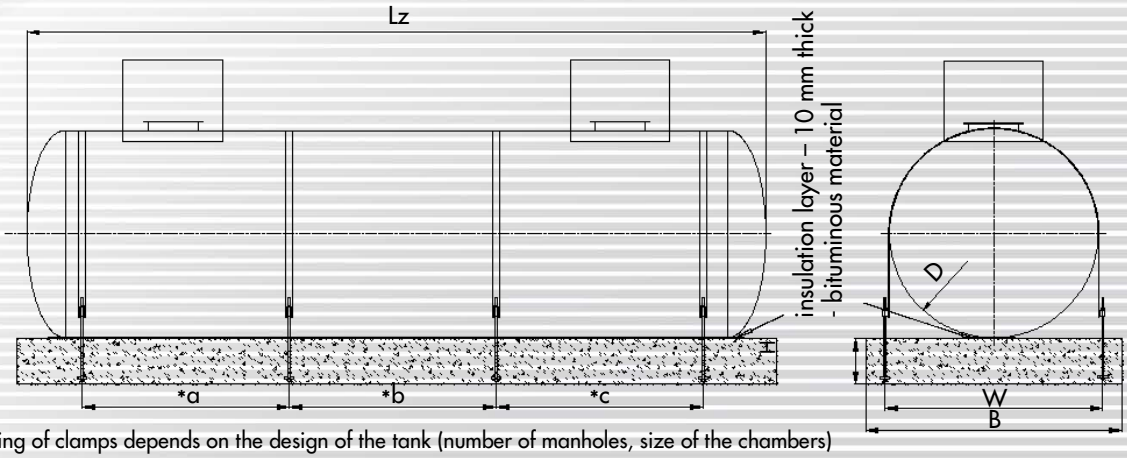

* spacing of clamps depends on the design of the tank (number of manholes, size of the chambers)

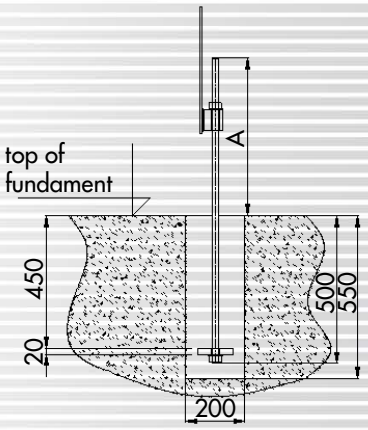

Tank volume	Tank diameter	Total length of the tank	Weight	Anchor	Length of the anchor	Spacing of anchors in the concrete	Anchor's protruding height from the concrete	Length of the clamp	Clamp dimension	No. of clamps
V	D	Lz	m		Lk	W	A	Lo	Bxg	
[m³]	[mm]	[mm]	[kg]	[M]	[anchor L]	[mm]	[mm]	[mm]	[mm x mm]	[pcs]
5		3040	1291							1
8		4540	1750							1
10	1600	5540	2100	24	1000	1728	500	4000	80 x 6	1
13		7040	2562							2
16		8540	3072							2
10		3660	2098							1
13		4660	2553							2
16		5660	3022							2
20	2000	6660	3500	24	1500	2128	1000	4000	80 x 6	2
25		8660	4405							3
30		10160	5163							3
35		11660	5883							3
20		4800	3685							2
25		5800	4319							2
30		6800	4949							2
40	2500	8800	6284	24	1000	2632	500	6000	100 x 8	3
50		10800	7540							3
60		12800	8886							4
70		14800	10137							4
40		6900	6445							3
50		8400	7740							3
60	2900	9900	8951	24	1500	3032	1000	6000	100 x 8	4
70		11400	10146							4
80		12900	11440							5
100		15900	13855							6

The bands and anchors are galvanised. For surface protection, we deliver a rubber layer which will be placed between the tank and the band. A insulation layer (10 mm thick) must be placed between the tank and the fundament (provided by the client).

The static strength of the anchoring system is calculated under the conditions:

- water level equal to the ground level
- a safety factor of 1.3 for the water buoyancy
- bulk density of soil – 18 $\frac{kN}{m^3}$
- bulk density of B20 concrete – 22 $\frac{kN}{m^3}$
- tank buried min. 800 mm

Note: Our calculation does not replace the need to obtain a site-specific calculation of the fundament and the uplift force.

www.cgh.com.pl

CGH Polska Sp. z o.o.
85-461 Bydgoszcz, ul. Srebrna 39
e-mail: info@cgh.com.pl · tel. (48 52) 370 66 74, 73, 53